WLAN-60

POYNTING
BEYOND A CONNECTED LIFE

ANTENNAS | WLAN-60 SERIES

UNI-DIRECTIONAL, DUAL-BAND WI-FI ANTENNA

2400 – 2500 MHz, 3300 – 3800 MHz & 5000 – 6000 MHz, 15 dBi

2400 – 2500 MHz
3300 – 3800 MHz
5000 – 6000 MHz

15 dBi

Increase X Mb/s

Uni-Directional

Machine to Machine

5G

2.4 – 2.5 GHz
5.0 – 6.0 GHz

3.5 GHz CBRS

Fire Resistant

IP 65

-40°C to +80°C

Internet of Things

- **Dual-band 2.4 GHz and 5 GHz Wi-Fi antenna**
- **Directional antenna with high gain**
- **Complaint with IEEE 802.11b/g/n and 802.11ac wireless standard**
- **Covers the 3.5 GHz CBRS band for future 5G applications**
- **Vandal and water-resistant enclosure (IP 65)**

APPLICATION AREAS

Urban

Rural/Farm

Product Overview

The WLAN-60 antenna is dual-band Wi-Fi antenna, developed by Poynting Antennas. The WLAN-60 antenna is a linear high gain, dual band antenna in one enclosure. The antenna can connect to any Wi-Fi access point whether it is older Wi-Fi technology or new dual band Wi-Fi technology. The antennas can therefore be used to resolve channel saturation and provide the ultimate in Wi-Fi performance and flexibility. This means that the antenna can be used for point to point links where there is an abundance of RF noise and cluttered environments.

The antenna operates in the two Wi-Fi frequency bands (2.4 GHz and 5 GHz), offering excellent utilization of the radio spectrum. The antenna has a maximum gain of 9dBi in the 2.4GHz band and 15dBi in the 5GHz band, which offers the best performance with reliable connections. The antenna also covers the 3.5 GHz CBRS band, which will be used for future 5G technologies with a peak gain of 9.5dBi. The housing is made of ABS which is a high impact resistant plastic and is also resistant to acids and other chemicals that may occur in industrial plants. The antenna can be opened on the side where an SMA female connector is placed. You can then feed the cable through the bypass gland, which means you do not have to join the antenna cable to extension cables. This eliminates connector losses and the need for taping and waterproofing the connectors for an outdoor installation.

Features

- Dual-band Wi-Fi antenna for 2.4 GHz and 5 GHz
- High gain directional antenna
- Covers 3.5 GHz CBRS band for future 5G applications
- Robust and weather resistant
- Lightweight design and easy installation

Application Areas

- Small business
- Building sites and open cast mines
- Production facilities and factories
- M2M and IoT applications
- Areas with large amounts of machinery (cluttered environments)

Revised: February 2024

Regulatory Compliance: RoHS 2011/65/EU Compliant | ISO 9001:2015
Document version: TS-A-WLAN-0060-V1 REV 8.0
www.poynting.tech

Frequency Bands

The WLAN-60 is a directional antenna that works from | 2400 – 2500 MHz | 3300 – 3800 MHz | and | 5000 – 6000 MHz |

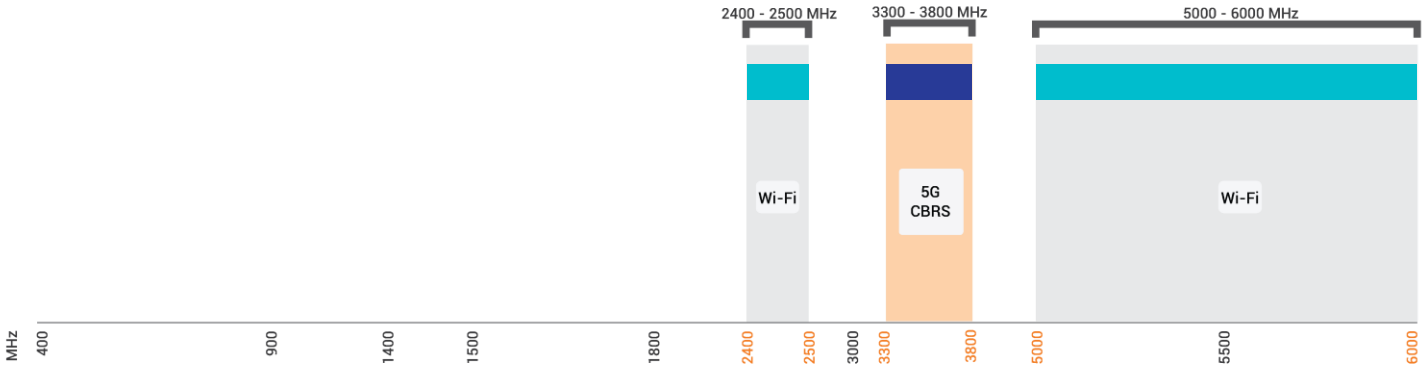

Indicates the 5G bands on which WLAN-60 works

Indicates the WI-FI bands on which WLAN-60 works

Antenna Overview

	Wi Fi DUALBAND
Ports	1
SISO / MIMO	SISO
Frequency Bands	2400 – 2500 MHz 3300 – 3800 MHz 5000 – 6000 MHz
Polarisation	Linear Vertical
Peak Gain	15 dBi
Coax Cable Type	N/A
Coax Cable Length	N/A
Connector Type	SMA (F)

**The connector is factory mounted to the antenna*

POYNTING
BEYOND A CONNECTED LIFE

Electrical Specifications

Frequency Bands:	2400 – 2500 MHz 3300 – 3800 MHz 5000 – 6000 MHz
Gain (Max):	9 dBi @ 2400 – 2500 MHz 9.5 dBi @ 3300 – 3800 MHz 15 dBi @ 5000 – 6000 MHz
VSWR:	< 2:1
Feed Power Handling:	10 W
Input Impedance:	50 Ohm (nominal)
Polarisation:	Linear Vertical
Coax Cable Loss:	N/A
DC Short:	Yes

Product Box Contents

Antenna:	A-WLAN-0060-V1
Mounting Bracket:	Cast aluminium swivel bracket

Ordering Information

Commercial Name:	WLAN-60
Order Product Code:	A-WLAN-0060-V1
EAN Number:	6009710923986

Mechanical Specifications

Product Dimensions:	240 mm x 240 mm x 60 mm
Packaged Dimensions:	260 mm x 280 mm x 80 mm
Weight:	0.76 kg
Packaged Weight:	1.334 kg
Radome Material:	ABS (Halogen Free)
Radome Colour:	Pantone – Cool Gray (1C)
Mounting Type:	Wall and Pole Mount

Environmental Specifications, Certification & Approvals

Antenna Wind Survival:	≤160 km/h
Temperature Range (Operating):	-40°C to +80°C
Environmental Conditions:	Outdoor/Indoor
Ingress Protection:	IP 65
Salt Spray:	MIL-STD 810G/ASTM B117
Operating Relative Humidity:	Up to 98%
Storage Humidity:	5% to 95% - non-condensing
Storage Temperature:	-40°C to +80°C
Enclosure Flammability Rating:	UL 94-HB
Impact Resistance:	IK 08
Product Safety & Environmental:	Complies with CE and RoHS standards

Revised: February 2024

Regulatory Compliance: RoHS 2011/65/EU Compliant | ISO 9001:2015
Document version: TS-A-WLAN-0060-V1 REV 8.0
www.poynting.tech

Antenna Performance Plots

VSWR

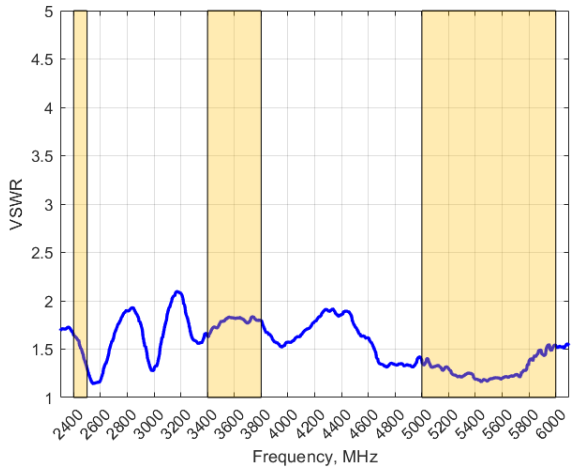

GAIN (EXCLUDING CABLE LOSS)

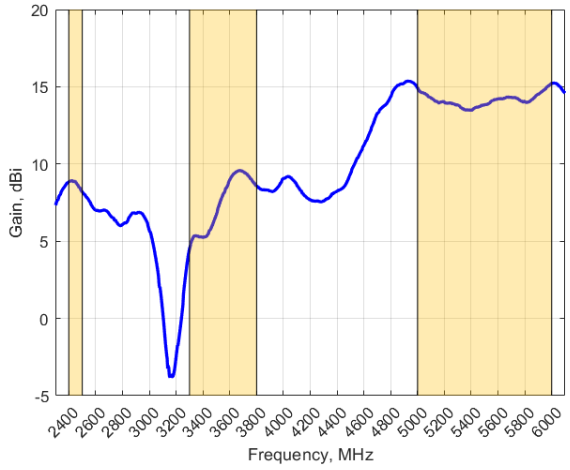

Voltage Standing Wave Ratio (VSWR)*

VSWR is a measure of how efficiently radio-frequency power is transmitted from a power source, through a transmission line, into a load. In an ideal system, 100% of the energy is transmitted which corresponds to a VSWR of 1:1.

The WLAN-60 delivers superior performance across all bands with a VSWR of <2:1.

**VSWR measured with a 2m low loss cable.*

Gain+ in dBi

15 dBi is the peak gain across all bands from 2400 – 2500 MHz, 3300 – 3800 MHz and 5000 – 6000 MHz

Gain @ 2400 – 2500 MHz:	9 dBi
Gain @ 3300 – 3800 MHz:	9.5 dBi
Gain @ 5000 – 6000 MHz:	15 dBi

+Antenna gain measured with polarisation aligned standard antenna

Technical Drawings

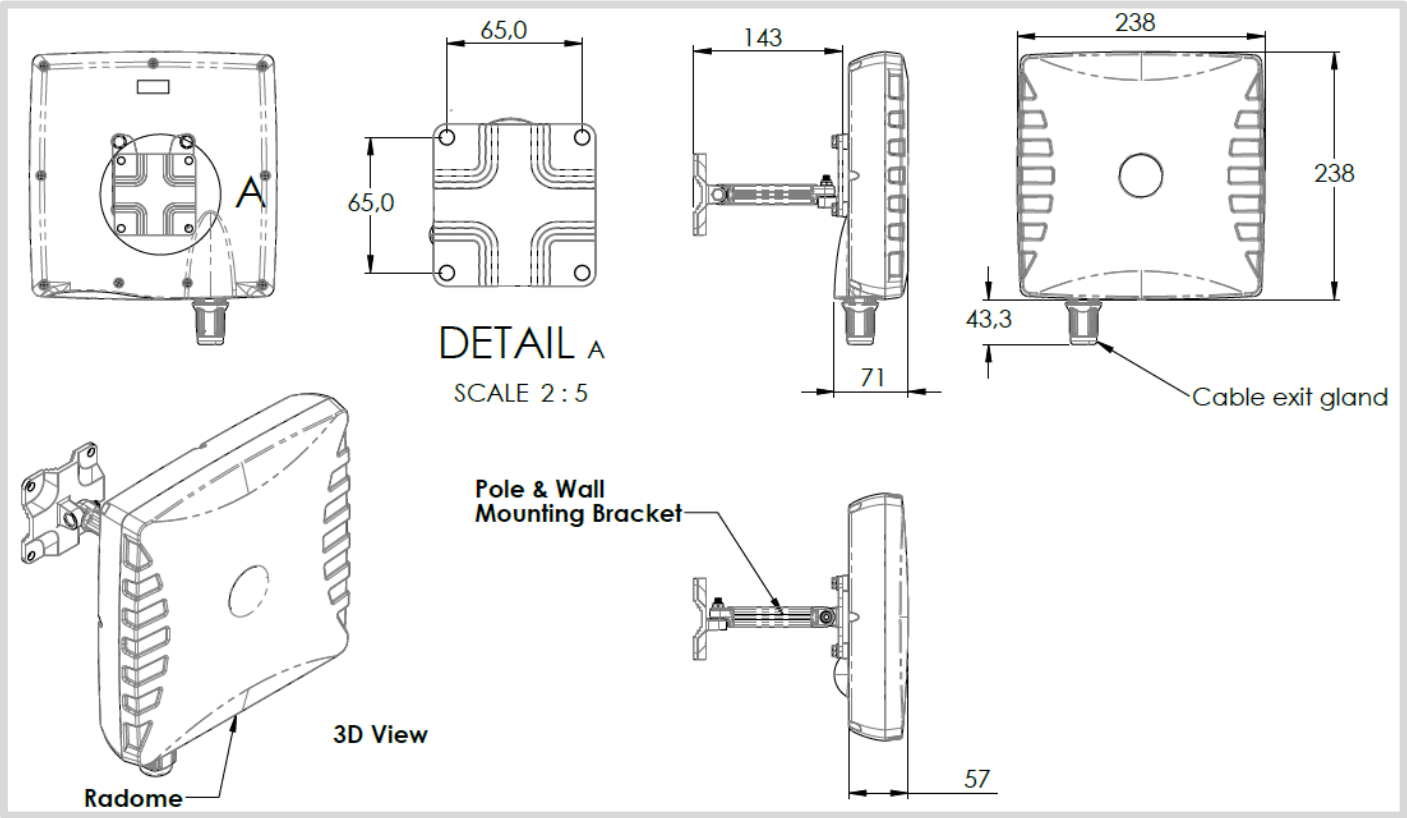

Radiation Patterns

Azimuth: 2400 - 2500 MHz

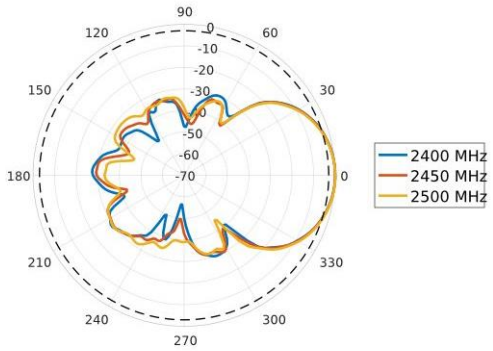

Elevation: 2400 – 2500 MHz

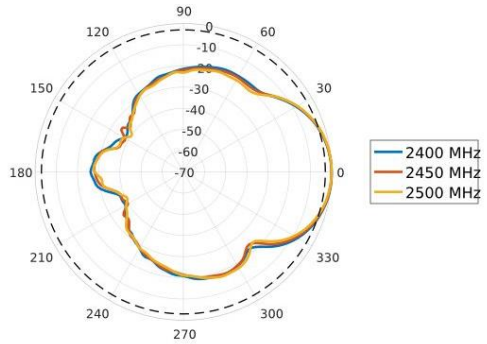

Azimuth: 3300 – 3800 MHz

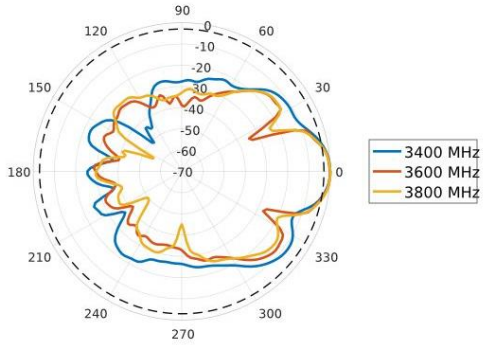

Elevation: 3300 - 3800 MHz

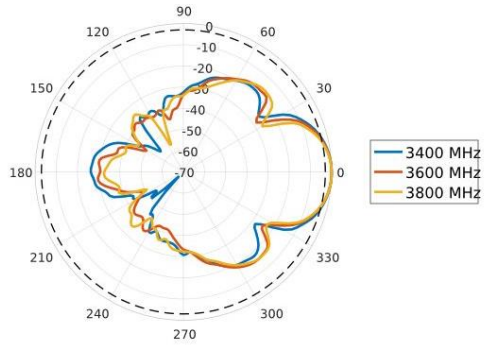

Azimuth: 5000 - 6000 MHz

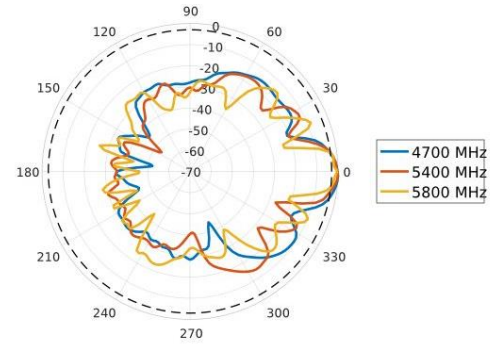

Elevation: 5000 – 6000 MHz

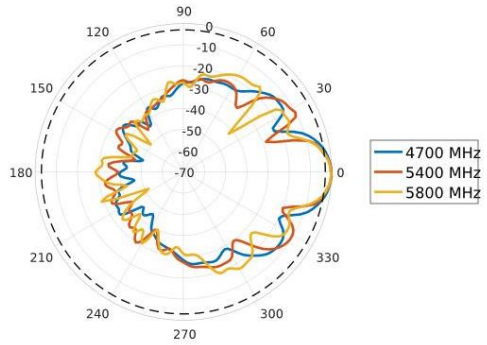

Revised: February 2024

Regulatory Compliance: RoHS 2011/65/EU Compliant | ISO 9001:2015
Document version: TS-A-WLAN-0060-V1 REV 8.0
www.poynting.tech

Mounting Options

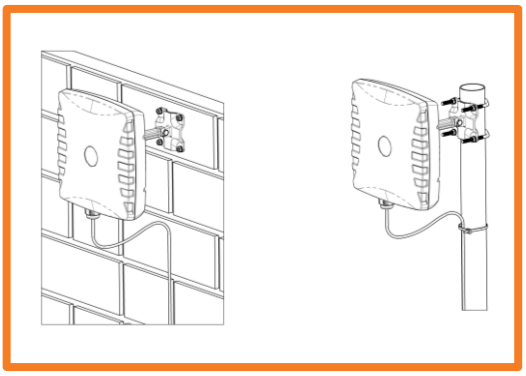

Pole Mount

Pole/Wall mounting bracket (included)

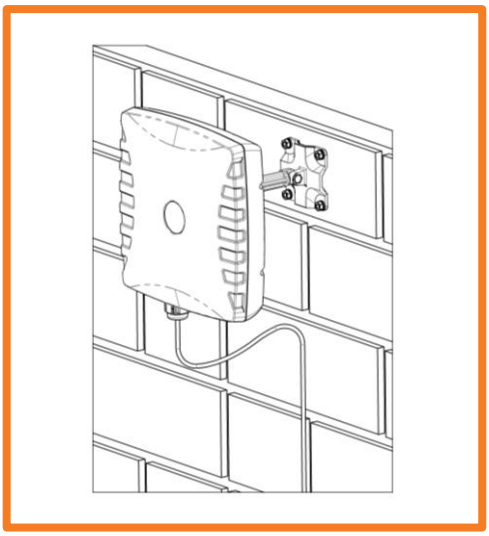

Wall Mount

Pole/Wall mounting bracket (included)

Revised: February 2024

Regulatory Compliance: RoHS 2011/65/EU Compliant | ISO 9001:2015
Document version: TS-A-WLAN-0060-V1 REV 8.0
www.poynting.tech

Additional Accessories

Extension Cables: Up to 15m HDF 195

Various connectors available

Installation poles and brackets available

See accessories technical specifications on www.poynting.tech

CONTACT POYNTING

Poynting Antennas (Pty) Ltd - Head Office
Unit 4, N1 Industrial Park,
Landmarks Avenue,
Samrand, 0157, South Africa
Phone: +27 (0) 12 657 0050
E-mail: info@poynting.tech
International Email: sales-global@poynting.tech

Poynting Europe
Regus Business Center Neue Messe Riem
Kronstadter Straße 4
81677 München
Germany
Phone: +49 89 7453 9002
E-mail: sales-europe@poynting.tech

Poynting USA
1804 Owen Court, Suite 104,
Mansfield,
TX 76063
USA
Phone: +1 817 533-8130
E-mail: sales-us@poynting.tech